Car Stereo
Service Bulletin

CSA-14

Sony Service Company - Technical Services
A Division of Sony Electronics Inc.
Sony Drive, Park Ridge, New Jersey 07656

Model: EXR-18; XR-3200 **No. 372**

Subject: Part Number Correction - Reference No. Q603, Transistor, 2SB1326-TV2

Date: August 9, 1995

Symptom:

(**) The part number listed on page 37 of the Service Manual for Ref # Q603, Transistor, 2SB1326-TV2, is incorrect.

Solution: Please note the correct part number as shown below.

REF	DESCRIPTION	PART NUMBER	
		INCORRECT	CORRECT
Q603	TRANSISTOR, 2SB1326-TV2	8-729-207-63	8-729-027-63

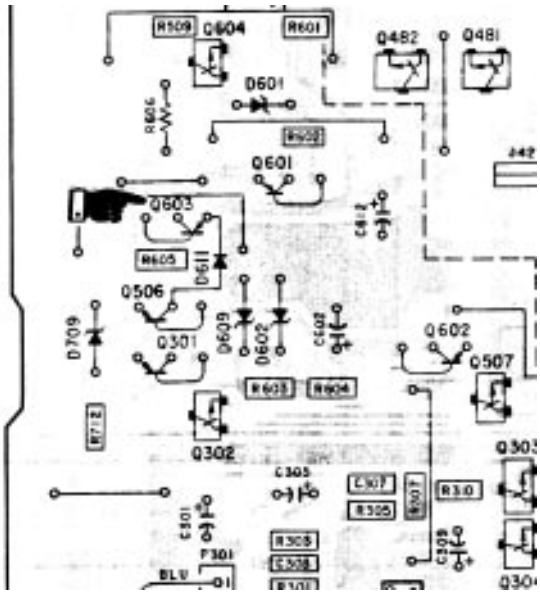

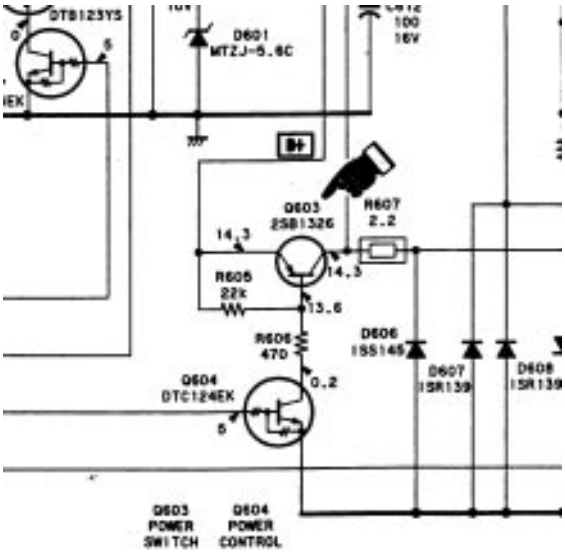

Reference: FPR-Q0995
Autoflagged - NO

PRINTED ON RECYCLED PAPER

PRINTED IN USA